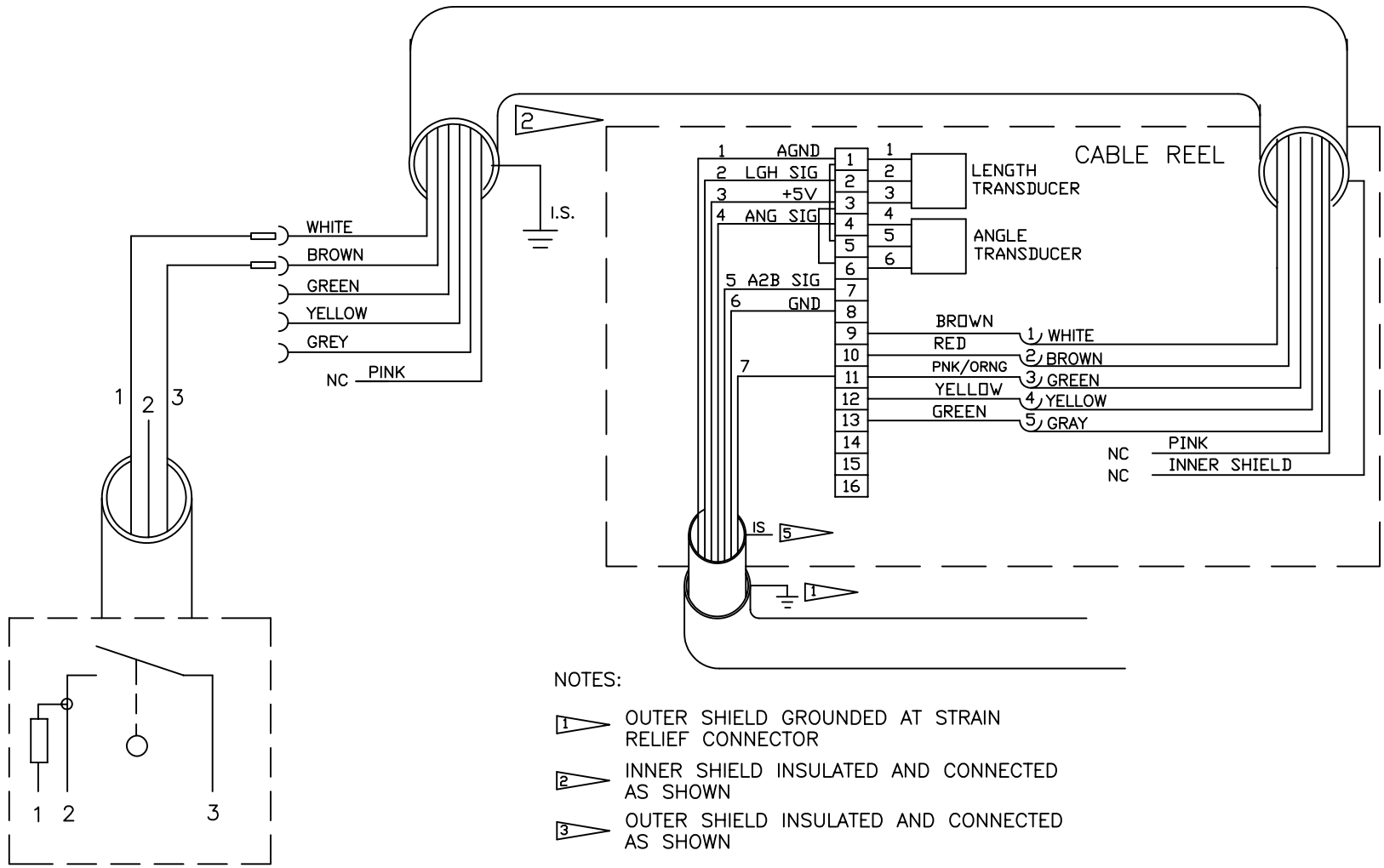

ANTI–TWO
BLOCK SWITCH

NOTES:

1. OUTER SHIELD GROUNDED AT STRAIN RELIEF CONNECTOR
2. INNER SHIELD INSULATED AND CONNECTED AS SHOWN
3. OUTER SHIELD INSULATED AND CONNECTED AS SHOWN
4. SWITCH PREWIRED AND POTTED
5. INNER SHIELD INSULATED AND TAPED

OS = OUTER SHIELD
IS = INNER SHIELD

PAT

PAT AMERICA, Inc.
1665 ORCHARD DRIVE
CHAMBERSBURG, PA 17201

LWG208 CABLE REEL SENSOR
W/6 CORE LENGTH CABLE & 5 POLE SLIPRING

GENERAL TOLERANCES X.XX = 0.01 X.XXX = 0.005

P/N 031–300–060–200

REV	ECN	DESCRIPTION	BY	APV	DATE
A	990060	ADD 7 COND DS CABLE TO BOM & DWG	CSH	CSH	05/03/99

990056

DRAWN CHRIS HERTZLER 4/22/99
APPROVED CHRIS HERTZLER 4/22/99
SCALE: NONE SHEET: 1 OF 1

SIZE A DWG NO. 031 300 31 0200 REV A

PAT America Inc. reserves proprietary rights to this drawing and to the data shown thereon. The drawing and data are confidential and are not to be used or reproduced without the written consent of PAT America Inc. This drawing is subject to technical modification without prior notice.

C.A.G.E. 79760