Safety instructions

# DPT-20

GB

Flameproof enclosures
Two-wire 4 … 20 mA
Two-wire 4 … 20 mA/HART
Two-wire 4 … 20 mA/HART with SIL qualification
Profibus PA
Foundation Fieldbus



CE 0158



Part of your business

## Contents


1 Area of applicability ..... 4

2 Important specification in the type code ..... 4

3 Different ignition protection types ..... 5

4 General information ..... 5

5 Application area ..... 6

6 Specific conditions of use ("X" identification) ..... 6

7 Important information for mounting and maintenance ..... 8

8 Safe operating mode ..... 11

9 Instructions for zone 0, zone 0/1 applications ..... 11

10 Potential equalization/Grounding ..... 12

11 Electrostatic charging (ESD) ..... 12

12 Electrical data ..... 13

13 Thermal data ..... 13


Supplementary documentation:

- Operating Instructions DPT-20
- Quick setup guide DPT-20
- EU type approval certificate TÜV 21 ATEX 292131 X (Document ID: 66090)
- SIL Safety Manual (Document ID: 62276)

Editing status: 2021-08-30

| | |
|---|---|
| DE | Sicherheitshinweise<br>für den Einsatz in explosionsgefährdeten Bereichen |
| EN | Safety instructions<br>for the use in hazardous areas |
| FR | Consignes de sécurité<br>pour une application en atmosphères explosibles |
| IT | Normative di sicurezza<br>per l'impiego in luoghi con pericolo di esplosione |
| ES | Instrucciones de seguridad<br>para el empleo en áreas con riesgo de explosión |
| PT | Normas de segurança<br>para utilização em zonas sujeitas a explosão |
| NL | Veiligheidsaanwijzingen<br>voor gebruik op plaatsen waar ontploffingsgevaar kan heersen |
| SV | Säkerhetsanvisningar<br>för användning i explosiionsfarliga områden |
| DA | Sikkerhedsforskrifter<br>til anvendelse i explosionsfarlig atmosfare |
| FI | Turvallisuusohjeet<br>räjähdysvaarallisisssa tiloissa käyttöä varten |
| EL | Υποδείξεις ασΦαλείας<br>για τη χρησιμοποίηση σε περιοχές που υπάρχει κίνδυνος έκρηξης |

| | |
|---|---|
| DE | Die vorliegenden Sicherheitshinweise sind in den Sprachen deutsch, englisch, französisch und spanisch verfügbar. Weitere EU-Landessprachen stellt der Hersteller nach Anforderungen zur Verfügung. |
| EN | The present safety instructions are available in German, English, French and Spanish. Further EU languages will be provided by the manufacturer upon request. |
| FR | Les présentes consignes de sécurité sont disponibles dans les langues allemand, anglais, français et espagnol. Le fabricant met d'autres langues de l'Union Européenne à disposition en fonction des demandes. |
| ES | Las presentes instrucciones de seguridad están disponibles en los idiomas alemán, inglés, francés y español. El fabricante pone a disposición según demanda otros idiomas nacionales de la UE. |

## 1 Area of applicability

These safety instructions apply to the level sensors DPT-20 of type series:

- DPT-20 -*D/4*-****Z/B-A/H/S/P/F*-******-****

with the electronics versions

- Z - Without additional current output 4 … 20 mA
- B - Additional current output 4 … 20 mA
- A - Two-wire 4 … 20 mA
- H - Two-wire 4 … 20 mA/HART
- S - Two-wire 4 … 20 mA/HART with SIL qualification
- P - Profibus PA
- F - Foundation Fieldbus

According to EU type approval certificate TÜV 21 ATEX 292131 X (certificate number on the type label) and for all instruments with safety instruction 66089.

The classification as well as the respective standards are stated in the EU type approval certificate:

- EN IEC 60079-0: 2018
- EN 60079-11: 2012
- EN 60079-1: 2014
- EN 60079-26: 2015

Type of protection marking:

- II 1/2G Ex ia/db IIC T6 … T1 Ga/Gb
- II 2G Ex db ia IIC T6 … T1 Gb

## 2 Important specification in the type code

**DPT-20-ab*-cd*ef-g*-******-**h***

| Position | | Feature | Description |
|---|---|---|---|
| a | Explosion protection | A | ATEX |
| | | I | IECEX / ATEX |
| b | Ignition protection type | D | Ex d - flameproof enclosure |
| | | 4 | Ex d and Ex t - flameproof and dust Ex |
| c | Housing material | A | Aluminium - single chamber |
| | | D | Aluminium - double chamber |
| | | V | Stainless steel single chamber (precision casting) |
| | | W | Stainless steel double chamber housing (precision casting) |
| d | Housing version / Protection | I | compact / IP66/IP67; NEMA 6P |
| | | D | compact / IP66/IP68 (0,2 bar); NEMA 6P |
| | | N | compact / IP66/IP68 (1 bar); NEMA 6P |
| | | M | compact / IP69K |
| | | A | axial cable outlet IP68 (PUR) with external housing / IP66/IP67; NEMA 6P |
| | | S | lateral cable outlet IP68 (PUR) with external housing / IP66/IP67; NEMA 6P |

| Position | | Feature | Description |
|---|---|---|---|
| e | Digital indication (AB-Modul) | B | Digital indication (AB-Modul) installed above |
| | | C | Digital indication (AB-Modul) laterally installed |
| | | Z | without |
| | | F | without display but lid with inspection window |
| f | Supplementary electronics | Z | without |
| | | B | Additional current output 4 … 20 mA |
| g | Output signal | A | Two-wire 4 … 20 mA |
| | | H | Two-wire 4 … 20 mA/HART |
| | | S | Two-wire 4 … 20 mA/HART with SIL qualification |
| | | F | Foundation Fieldbus |
| | | P | Profibus PA |
| h | Seal material (temperature range) | V | FKM (-20 … +85 °C) |
| | | P | PTFE (-40 … +85 °C) |
| | | C | Copper seal (-40 … +85 °C) |
| | | 3 | EPDM (-40 … +85 °C) |
| | | * | Further sealings |

In the following, all above mentioned versions are called DPT-20. If parts of these safety instructions refer only to certain versions, then these will be mentioned explicitly with their type code.

## 3 Different ignition protection types

The DPT-20 can be either used in explosive dust atmospheres or in explosive gas atmospheres.

The operator must specify the selected ignition protection type before installation. The selected ignition protection must be determined by marking it firmly on the identification label of the type plate.

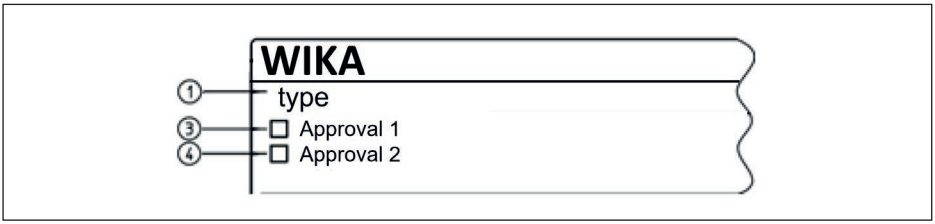


*1 DPT-20*
*3 Identificatiion label: Approval in Gas ignition protection type e. g. „Ex i“, „Ex d“*
*4 Identificatiion label: Approval in dust ignition protection type e. g. „Ex t“*

If DPT-20 is installed in a dust atmosphere, then the safety instructions and the instructions in the respective certificates must be noted:

| Installation | Approval | Certificate | Safety instruction |
|---|---|---|---|
| Dust | "4" | TÜV 21 ATEX 292133 X | 66091 |

## 4 General information

DPT-20 is a differential pressure transmitter for measurement of differential pressure, flow, level,

density and interface.

It consists of a differential pressure measuring cell and an electronics housing which is optionally also executed as external housing.

Optionally, the optional digital display (AB-Modul) can also be installed.

The DPT-20 are suitable for applications in hazardous atmospheres of all combustible materials of explosion groups IIA, IIB and IIC.

The DPT-20 are suitable for applications requiring category 1/2G (EPL Ga/Gb) or 2G (EPL Gb) instruments.

## 5 Application area

**Category 1/2G (EPL Ga/Gb instruments)**
The measured medium inside the sensor requires a category 1G (EPL Ga) instrument or the differential pressure measurement component with separate version is in an area in which category 1G (EPL Ga) instruments are required.

The electronics housing is in an area where category 2G (EPL Gb) instruments are required.

**Category 2G (EPL Gb instruments)**
The measured medium inside the sensor requires a category 2G (EPL Gb) instrument and the differential pressure measurement component or the electronics housing with separate version is in an area in which category 2G (EPL Gb) instruments are required.

**Note:**
A direct installation in the vessel wall is not planned for this instrument!

| Instrument | 3G (EPL Gc) | 2G (EPL Gb) | 1/2G (EPL Ga/Gb) |
|---|---|---|---|
| Ex Zone 2  |  | | |
| Ex Zone 1  | |  |  |
| Ex Zone 0  | | | |

## 6 Specific conditions of use ("X" identification)

The following overview is listing all special properties of DPT-20, which make a labelling with the symbol "X" behind the certificate number necessary.

**Ambient temperature**
You can find the details in chapter " *Thermal data*" of these safety instructions.

**Impact and friction sparks (on metal parts)**
The DPT-20 in light metal versions (e.g. aluminium, titanium, zircon) must be mounted in such a way that sparks from impact and friction between light metals and steel (except stainless steel, if the presence of rust particles can be excluded) cannot occur.

**When used as Ga/Gb instrument**
The separating wall (diaphragm) to the wetted area has a wall thickness of < 1 mm due to the function. During the use it must be ensured that influence of the diaphragm, i.e. due to aggressive media or mechanical danger can be excluded.

For versions with standard process fittings, the installation must be made in such a way that at least protection rating IP67 acc. to IEC/EN 60529 is reached on the process fittings and vent holes of the differential pressure measuring cell.

**For versions with standard process fittings**
The measuring elements must be installed in such a way that at least the degree of protection IP67 according to EN 60529 is fulfilled on the process fittings and vent holes.

**For versions with capillary connections**
The capillary connections are designed to be connected to a capillary with diaphragm seal.

The filling holes are intended to bring in a fill fluid.

To prevent a zone entrainment from Zone 0, the diaphragm seal or the diaphragm seal and capillary line have to be suitably designed. The pressure transfer system has to be technically tight. The filling hole has to be tightly sealed.

**Electrostatic charge (ESD) (on plastic parts)**
You can find the details in chapter " *Electrostatic charging (ESD)*" of these safety instructions.

**For versions with separate housing**
For the version with separate housing, the potential equalization must be provided in the complete range of the connection cable between electronics housing and transmitter housing.

**Non-grounded, metallic parts**
The resistance between aluminium housing to metal measuring point identification plate is $> 10^9$ Ohm.

The capacitance of the metal measuring point identification plate was measured as follows:

| Measurement loop identification label | Capacitance |
|---|---|
| 45 x 23 mm (standard) | 21 pF |
| 100 x 30 mm | 52 pF |
| 73 x 47 mm | 61 pF |

**Media resistance**
The wetted materials must be resistant against the measured media.

**Pressure-tight connection compartment**
The flameproof connection compartment of these devices shall be equipped with cable and line entries and sealing plugs or piping systems adequately certified in accordance with IEC/EN 60079-0 and IEC/EN 60079-1.

# 7 Important information for mounting and maintenance

**General instructions**

The following requirements must be fulfilled for mounting, electrical installation, setup and maintenance of the instrument:

- The staff must be qualified according the respective tasks
- The staff must be trained in explosion protection
- The staff must be familiar with the respectively valid regulations, e.g. planning and installation acc. to EN 60079-14
- Make sure when working on the instrument (mounting, installation, maintenance) that there is no explosive atmosphere present, the supply circuits should be voltage-free, if possible.
- The instrument has to be mounted according to the manufacturer specifications, the EU type approval certificate and the valid regulations and standards
- Modifications on the instrument can influence the explosion protection and hence the safety, therefore repairs are not permitted to be conducted by the end user
- Modifications must only be carried out by authorized employees
- Use only approved spare parts
- Components for installation and connection not included in the approval documents are only permitted if these correspond technically to the latest standard mentioned on the cover sheet. They must be suitable for the application conditions and have a separate certificate. The special conditions of the components must be noted and if necessary, the components must be integrated in the type test. This applies also to the components already mentioned in the technical description.
- Vessel installations and probable flow must be taken into account

**Cable and wire entries**

- The DPT-20 must be connected via suitable cable gland or conduit systems that are in conformity with the requirements of the flame proofing and the IP protection and provided with a separate type approval certificate. When connecting DPT-20 to conduit systems, the corresponding sealing facility must be connected directly to the housing.
- The red thread or/dust covers screwed in when the instruments are shipped (depending on the version) must be removed before setup and replaced by cable entries or closing screws suitable for the respective ignition protection type and IP protection.
- Note type and size of the thread: A label with the respective thread name is in the area of the respective thread
- Threads must have no damages
- Cable entries and closing screws should be mounted correctly and according to the safety instructions of the manufacturer to ensure the specified ignition protection type and IP protection rating. When using certified or suitable cable glands, closing screws or plug connections, it is absolutely necessary to note the corresponding certificates/documents. Supplied cable entries or closing screws meet these requirements.
- Unused openings must be closed with plugs suitable for the ignition protection type and IP protection. Supplied plugs meet these requirements.
- Cable or wire entries resp. the closing screws must be tightly screwed into the housing
- The connection cables resp. pipeline sealing facilities must be suitable for the application conditions (e.g. temperature range) of the application
- With surface temperatures > 70 °C, the cables must be suitable for the higher application conditions
- The connection cable of DPT-20 has to be wired fix and in such a way that damages can be excluded.

**Single chamber housing**

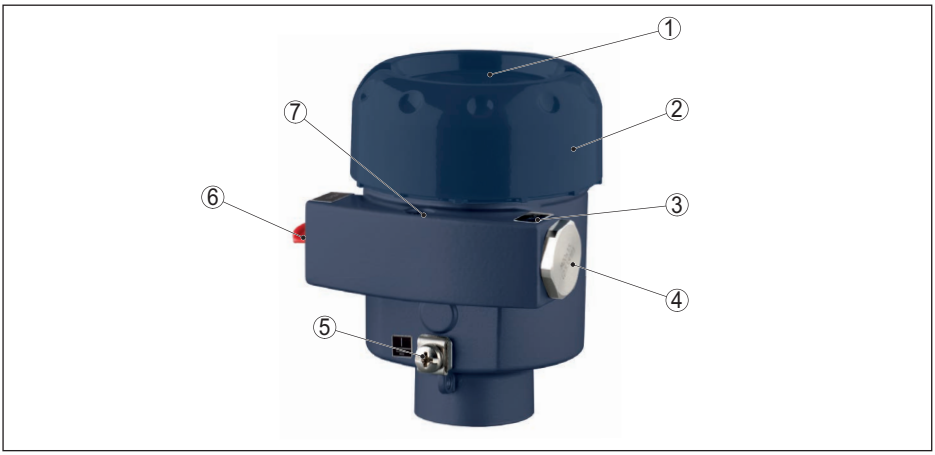


*1 Lid, optionally with inspection window*
*2 Electronics compartment*
*3 Label: Thread type*
*4 Screw plug*
*5 External ground terminal*
*6 Red threaded or dust protection cap*
*Transport protection, replace with installation*
*7 Locking screws of the lid for lid locking*

**Double chamber housing**

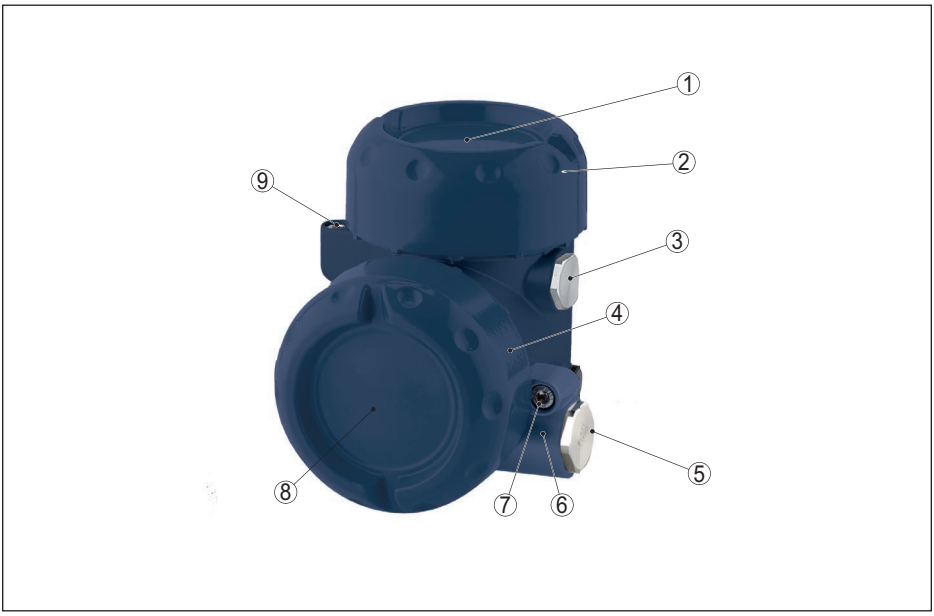


*1 Lid, optionally with inspection window*
*2 Electronics compartment*
*3 Screw plug*
*4 Connection compartment*
*5 Transport protection, replace with installation Red threaded or dust protection cap*
*6 Label: Thread type*
*7 Locking screws of the lid for lid locking*
*8 Lid, optionally with inspection window*
*9 Locking screws of the lid for lid locking*

**Mounting**

Keep in mind for instrument mounting

- Mechanical damage on the instrument must be avoided
- Mechanical friction must be avoided
- Vessel installations and probable flow must be taken into account
- Process connections separating two areas of different Ex-zones must comply to valid regulations and standards and the protection rating must be in conformity to EN 60529.
- Close the housing lid (s) up to the stop before starting operating, to ensure the IP protection rating specified on the type label
- Protect the lid against unauthorized opening by unscrewing the locking screw up to the stop. With double chamber housing, you have to protect both lids.

**Maintenance**

To ensure the functionality of the device, periodic visual inspection is recommended for:

- Secure mounting
- No mechanical damages or corrosion
- Worn or otherwise damaged cables

- No loose connections of the line connections, equipotential bonding connections
- Correct and clearly marked cable connections

The parts of the DPT-20 being in contact with flammable media during operation must be included in the periodic overpressure test of the plant.

**Flameproof enclosure "d"**
- The terminals for connecting the operating voltage or signal circuits are integrated in the connection compartment with type of protection flameproof enclosure "d"
- The thread gaps between housing and cover as well as between threaded fitting and container are flameproof joints
- It is not allowed to repair the flameproof joints.
- Cable, wire entries and closing screws must be certified acc. to ignition protection type "Flameproof exclosures Ex d". Cable, wire entries and closing screws of simple design must not be used.
- Separately certified cable and wire entries can determine the permissible ambient temperature range or the temperature classes
- For connection to a "Conduit" system the corresponding sealing facility must be attached directly to the "Ex d" connection compartment
- Unused openings must be sealed according to ignition protection type "Flameproof enclosures Ex d"
- Only one threaded adapter is allowed per thread, when using a closing screw, threaded adapters are not allowed

## 8 Safe operating mode

**General operating conditions**
- Do not operate the instrument outside the electrical, thermal and mechanical specifications of the manufacturer
- Use the instrument only in media against which the wetted parts are sufficiently resistant
- Note the relation between process temperature on the sensor/antenna and the permissible ambient temperature on the electronics housing. For permissible temperatures, see the respective temperature tables. See chapter " *Thermal data*".
- If necessary, a suitable overvoltage arrester can be connected in front of the DPT-20
- Lids must not be opened if there is a hazardous atmosphere. The housing lids are marked with the warning label:

WARNING - DO NOT OPEN WHEN AN EXPLOSIVE ATMOSPHERE IS PRESENT

- Components for installation and connection not included in the approval documents are only permitted if these correspond technically to the latest standard mentioned on the cover sheet. They must be suitable for the application conditions and have a separate certificate. The special conditions of the components must be noted and if necessary, the components must be integrated in the type test. This applies also to the components already mentioned in the technical description.

## 9 Instructions for zone 0, zone 0/1 applications

In hazardous areas, the instrument, sensor measuring system in zone 0 should only be operated under atmospheric conditions:

- Temperature: -20 … +60 °C.

- Pressure: 80 … 110 kPa (0.8 … 1.1 bar)
- Air with normal oxygen content, normally 21 %

The operator must ensure that the medium temperature in zone 0 is not higher than 80 % of the self-ignition temperature of the concerned medium (in °C) and does not exceed the max. permissible flange temperature depending on the temperature class. The parts of the sensor which during operation are in contact with flammable products, must be integrated in the periodic overpressure test of the plant.

If no explosive mixtures or additional application conditions are certified resp. supplementary measures such as e.g. according to EN 1127-1 taken, then the instruments can be also operated according to the manufacturer specification outside atmospheric conditions.

If there is a risk of dangerous potential differences inside zone 0, then suitable measures for circuits in zone 0 must be taken, e.g. according to the requirements of EN 60079-14.

Process fittings between two explosion protection areas require category 1G (EPL Ga) and less endangered areas must show a tightness in accordance with protection rating IP67 acc. to EN 60529.

## 10 Potential equalization/Grounding

- Integrate the instruments into the local potential equalisation, e.g. via the internal or external earth terminal
- The potential equalization terminal must be secured against loosening
- If grounding of the cable screening is necessary, this must be carried out acc. to the valid standards and regulations, e.g. acc. to EN 60079-14
- For the version with separate housing, the potential equalization must be provided in the complete range of the connection cable between electronics housing and transmitter housing

## 11 Electrostatic charging (ESD)

In case of instrument versions with electrostatically chargeable plastic parts, the danger of electrostatic charging and discharging must be taken into account!

The following parts can charge and discharge:

- Lacquered housing version or alternative special lacquering
- Plastic housing, plastic housing parts
- Metal housing with inspection window
- Plastic process fittings
- Plastic-coated process fittings and/or plastic-coated sensors
- Connection cable for separate versions
- Type label
- Isolated metallic labels (measuring point identification plate)

Take note in case of danger of electrostatic charges:

- Avoid friction on the surfaces
- Do not dry clean the surfaces

The instruments must be mounted/installed in such a way that the following can be ruled out:

- electrostatic charges during operation, maintenance and cleaning.
- process-related electrostatic charges, e.g. by measuring media flowing past

The warning label indicates danger:

WARNING - POTENTIAL ELECTROSTATIC CHARGING HAZARD - SEE INSTRUCTIONS

## 12 Electrical data

| DPT-20 with 4 … 20 mA output signal (A/H/S) | |
|---|---|
| **Supply and signal circuit:**<br>Terminal 1[+], 2[-] in electronics compartment of the single chamber housing | U = 9.6 … 35 V DC<br>$U_m$ = 253 V AC |
| **Supply and signal circuit:**<br>Terminal 1[+], 2[-] in connection compartment of the double chamber housing | |

| DPT-20 with additional current output 4 … 20 mA (B) | |
|---|---|
| **Supply and signal circuit I:**<br>Terminal 1[+], 2[-] in connection compartment of the double chamber housing | U = 9.6 … 35 V DC<br>$U_m$ = 253 V AC |
| **Supply and signal circuit II:**<br>Terminal 7[+], 8[-] in connection compartment of the double chamber housing | |

| DPT-20 with Foundation Fieldbus or Profibus PA output signal (F/P) | |
|---|---|
| **Supply and signal circuit:**<br>Terminal 1[+], 2[-] in electronics compartment of the single chamber housing | U = 9 … 32 V DC<br>$U_m$ = 253 V AC |
| **Supply and signal circuit:**<br>Terminal 1[+], 2[-] in connection compartment of the double chamber housing | |

| Display and adjustment circuit: | |
|---|---|
| Terminals 5, 6, 7, 8 in electronics compartment of the single chamber housing | Only for connection to the associated display unit DI-PT-E. |
| Terminals 5, 6, 7, 8 in connection compartment of the double chamber housing | |
| Spring contacts in electronics compartment of the double chamber housing | Only for connection to the digital display (AB-Modul). |

| Measuring circuit: | |
|---|---|
| DPT-20 with housing version cable outlet with external housing (A/S)<br>Terminals in external housing: 1[yellow], 2[white], 3[red], 4[black] | In the version with a cable between electronics housing and the differential pressure component, a max. cable length of 180 m is permitted.<br>The intrinsically safe circuit to the differential pressure component is galvanically connected to ground potential. |

## 13 Thermal data

The following temperature tables apply to all housing and electronic versions and for the use as instrument of category 1/2G and 2 G.

**DPT-20 with the feature housing version compact (I/M/N)**

| Temperature class | Ambient temperature (Ta) or medium temperature (Tp) on the sensor housing and the sensor |
|---|---|
| T6 (+85 °C) | -40 … +55 °C |
| T5 (+100 °C) | |
| T4 (+135 °C) | -40 … +60 °C |
| T3 (+200 °C) | |
| T2 (+300 °C) | |
| T1 (+450 °C) | |

**DPT-20 with the features housing version cable outlet with external housing (A/S) and digital display (AB-Modul) installed (B/C)**

| Temperature class | Ambient temperature (Ta) on the sensor housing | Ambient temperature (Ta) or medium temperature (Tp) on the sensor |
|---|---|---|
| T6 (+85 °C) | -40 … +60 °C | -40 … +55 °C |
| T5 (+100 °C) | | |
| T4 (+135 °C) | | -40 … +85 °C |
| T3 (+200 °C) | | |
| T2 (+300 °C) | | |
| T1 (+450 °C) | | |

**DPT-20 with the features housing version cable outlet with external housing (A/S), without digital display (AB-Modul) (Z/F)**

| Temperature class | Ambient temperature (Ta) on the sensor housing | Ambient temperature (Ta) or medium temperature (Tp) on the sensor |
|---|---|---|
| T6 (+85 °C) | -50 … +60 °C | -40 … +55 °C |
| T5 (+100 °C) | | |
| T4 (+135 °C) | | -40 … +85 °C |
| T3 (+200 °C) | | |
| T2 (+300 °C) | | |
| T1 (+450 °C) | | |

## Notes

Printing date:

All statements concerning scope of delivery, application, practical use and operating conditions of the sensors and processing systems correspond to the information available at the time of printing.

**WIKA Alexander Wiegand SE & Co. KG**
Alexander-Wiegand-Straße 30
63911 Klingenberg
Germany
Phone (+49) 9372/132-0
E-mail: info@wika.de
www.wika.de

66089-EN-220218