Safety instructions

DPT-20

GB

Dust ignition protection by enclosure
Two-wire 4 … 20 mA
Two-wire 4 … 20 mA/HART
Two-wire 4 … 20 mA/HART with SIL qualification
Profibus PA
Foundation Fieldbus



CE 0158

WIKA
Part of your business

Contents

1 Area of applicability 4

2 Important specification in the type code 4

3 Different ignition protection types 5

4 General information 6

5 Application area 6

6 Specific conditions of use ("X" identification) 7

7 Important information for mounting and maintenance 7

8 Safe operating mode 10

9 Instructions for zone 0/20 applications 11

10 Potential equalization/Grounding 11

11 Electrostatic charging (ESD) 11

12 Electrical data 12

13 Thermal data 13

Supplementary documentation:

- Operating Instructions DPT-20
- Quick setup guide DPT-20
- EU type approval certificate TÜV 21 ATEX 292133 X (Document ID: 66092)
- SIL Safety Manual (Document ID: 62276)

Editing status: 2021-08-30

DE	Sicherheitshinweise für den Einsatz in explosionsgefährdeten Bereichen
EN	Safety instructions for the use in hazardous areas
FR	Consignes de sécurité pour une application en atmosphères explosibles
IT	Normative di sicurezza per l'impiego in luoghi con pericolo di esplosione
ES	Instrucciones de seguridad para el empleo en áreas con riesgo de explosión
PT	Normas de segurança para utilização em zonas sujeitas a explosão
NL	Veiligheidsaanwijzingen voor gebruik op plaatsen waar ontploffingsgevaar kan heersen
SV	Säkerhetsanvisningar för användning i explosiionsfarliga områden
DA	Sikkerhedsforskrifter til anvendelse i explosionsfarlig atmosfare
FI	Turvallisuusohjeet räjähdysvaarallisisssa tiloissa käyttöä varten
EL	Υποδείξεις ασΦαλείας για τη χρησιμοποίηση σε περιοχές που υπάρχει κίνδυνος έκρηξης

DE	Die vorliegenden Sicherheitshinweise sind in den Sprachen deutsch, englisch, französisch und spanisch verfügbar. Weitere EU-Landessprachen stellt der Hersteller nach Anforderungen zur Verfügung.
EN	The present safety instructions are available in German, English, French and Spanish. Further EU languages will be provided by the manufacturer upon request.
FR	Les présentes consignes de sécurité sont disponibles dans les langues allemand, anglais, français et espagnol. Le fabricant met d'autres langues de l'Union Européenne à disposition en fonction des demandes.
ES	Las presentes instrucciones de seguridad están disponibles en los idiomas alemán, inglés, francés y español. El fabricante pone a disposición según demanda otros idiomas nacionales de la UE.

1 Area of applicability

These safety instructions apply to the differential pressure transmitters DPT-20 of type series:

- DPT-20 -*T/2/4*-****Z/B-A/H/S/P/F*-******-****

with the electronics versions

- Z - Without additional current output 4 … 20 mA
- B - Additional current output 4 … 20 mA
- A - Two-wire 4 … 20 mA
- H - Two-wire 4 … 20 mA/HART
- S - Two-wire 4 … 20 mA/HART with SIL qualification
- P - Profibus PA
- F - Foundation Fieldbus

According to EU type approval certificate TÜV 21 ATEX 292133 X (certificate number on the type label) and for all instruments with safety instruction 66091.

The classification as well as the respective standards are stated in the EU type approval certificate:

- IEC EN 60079-0: 2018
- EN 60079-11: 2012
- EN 60079-31: 2014

Type of protection marking:

- II 1D Ex ia ta IIC T6 … T1 Da
- II 1/2D Ex ia/tb IIC T6 … T1 Da/Db
- II 1/3D Ex ia/tc IIC T6 … T1 Da/Dc
- II 2D Ex ia tb IIC T6 … T1 Db

2 Important specification in the type code

DPT-20-ab*-cd*ef-g*-****-**h***

Position		Feature	Description
a	Explosion protection	A	ATEX
b	Ignition protection type	2	Ex ia and Ex t - intrinsically safe and dust Ex
		4	Ex d and Ex t - flameproof and dust Ex
		T	Ex t - Dust-Ex
c	Housing material	A	Aluminium - single chamber
		D	Aluminium - double chamber
		V	Stainless steel single chamber (precision casting)
		W	Stainless steel double chamber housing (precision casting)
d	Housing version / Protection	I	compact / IP66/IP67; NEMA 6P
		D	compact / IP66/IP68 (0,2 bar); NEMA 6P
		N	compact / IP66/IP68 (1 bar); NEMA 6P
		M	compact / IP69K
		A	axial cable outlet IP68 (PUR) with external housing / IP66/IP67; NEMA 6P
		S	lateral cable outlet IP68 (PUR) with external housing / IP66/IP67; NEMA 6P

Position		Feature	Description
e	Digital indication (AB-Modul)	B	Digital indication (AB-Modul) installed above
		C	Digital indication (AB-Modul) laterally installed
		Z	without
		F	without display but lid with inspection window
f	Supplementary electronics	Z	without
		B	Additional current output 4 … 20 mA
g	Output signal	A	Two-wire 4 … 20 mA
		H	Two-wire 4 … 20 mA/HART
		S	Two-wire 4 … 20 mA/HART with SIL qualification
		F	Foundation Fieldbus
		P	Profibus PA
h	Seal material (temperature range)	V	FKM (-20 … +85 °C)
		P	PTFE (-40 … +85 °C)
		C	Copper seal (-40 … +85 °C)
		3	EPDM (-40 … +85 °C)
		*	Further sealings

In the following, all above mentioned versions are called DPT-20. If parts of these safety instructions refer only to certain versions, then these will be mentioned explicitly with their type code.

3 Different ignition protection types

The DPT-20 can be either used in explosive dust atmospheres or in explosive gas atmospheres.

The operator must specify the selected ignition protection type before installation. The selected ignition protection must be determined by marking it firmly on the identification label of the type plate.

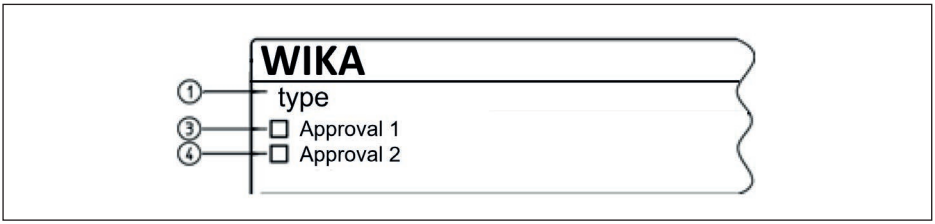

1 DPT-20
3 Identificatiion label: Approval in Gas ignition protection type e. g. „Ex i“, „Ex d“
4 Identificatiion label: Approval in dust ignition protection type e. g. „Ex t“

If DPT-20 is installed in a gas atmosphere, then the safety instructions and the instructions in the respective certificates must be noted:

Installation	Approval	Certificate	Safety instruction
Intrinsic safety	"2"	TÜV 21 ATEX 292099 X	66087
Flameproof enclosures	"4"	TÜV 21 ATEX 292131 X	66089

4 General information

The differential pressure transmitters DPT-20 are used for differential pressure measurement of liquids and gases in dust-explosive atmospheres.

The DPT-20 consist of an electronic housing, a differential pressure measuring cell and process fittings.

Optionally, the optional digital display (AB-Modul) can also be installed.

The DPT-20 are suitable for use in areas with combustible, dust generating bulk solids of group IIIA, IIIB and IIIC. These sensors are suitable for applications requiring category 1D (EPL Da), 1/2D (EPL Da/Db), 1/3D (EPL Da/Dc) or 2D (EPL Db) instruments.

5 Application area

Category 1D (EPL Da instruments)
The electronic housing and the differential pressure measuring cell with the mechanical fixing element are installed in hazardous areas of zone 20, in areas requiring instruments of category 1D (EPL Da).

Category 1/2D (EPL Da/Db instruments)
The electronics housing is installed in hazardous areas of zone 21 requiring a category 2D (EPL Db) instrument.

The pipework which connects the differential pressure measuring cell to the process leads to an area where the use of a category 1D (EPL Da) instrument is required.

Category 2D (EPL Db instruments)
The electronic housing and the differential pressure measuring cell with the mechanical fixing element are installed in hazardous areas of zone 21, in areas requiring instruments of category 2D (EPL Db).

Category 1/3D (EPL Da/Dc instruments)
The electronics housing is installed in hazardous areas of zone 22 requiring a category 3D (EPL Dc) instrument.

The pipework which connects the differential pressure measuring cell to the process leads to an area where the use of a category 1D (EPL Da) instrument is required.

Instrument	3D (EPL Dc)	2D (EPL Db)	1/2D (EPL Da/Db)	1D (EPL Da)
Ex Zone 22 				
Ex Zone 21 				
Ex Zone 20 				

6 Specific conditions of use ("X" identification)

The following overview is listing all special properties of DPT-20, which make a labelling with the symbol "X" behind the certificate number necessary.

Ambient temperature
You can find the details in chapter " *Thermal data*" of these safety instructions.

Impact and friction sparks
The DPT-20 in light metal versions (e.g. aluminium, titanium, zircon) must be mounted in such a way that sparks from impact and friction between light metals and steel (except stainless steel, if the presence of rust particles can be excluded) cannot occur.

When used as Da/Db or Da/Dc instrument
The separating wall (diaphragm) to the wetted area has a wall thickness of < 1 mm due to the function. During the use it must be ensured that influence of the diaphragm, i.e. due to aggressive media or mechanical danger can be excluded.

For versions with standard process fittings, the installation must be made in such a way that at least protection rating IP67 acc. to EN 60529 is reached on the process fittings and vent holes of the differential pressure measuring cell.

For versions with Modbus barrier "U"
The differential pressure transmitter with integrated electronics "Four-wire with Modbus barrier" must not be used for EPL Da applications.

For versions with external housing
For the version with external housing, the potential equalization must be provided in the complete range of the connection cable between electronics housing and transmitter housing.

Non-grounded, metallic parts
The resistance between aluminium housing to metal measuring point identification plate is $> 10^9$ Ohm.

The capacitance of the metal measuring point identification plate was measured as follows:

Measurement loop identification label	Capacitance
45 x 23 mm (standard)	21 pF
100 x 30 mm	52 pF
73 x 47 mm	61 pF

7 Important information for mounting and maintenance

General instructions
The following requirements must be fulfilled for mounting, electrical installation, setup and maintenance of the instrument:

- The staff must be qualified according the respective tasks
- The staff must be trained in explosion protection
- The staff must be familiar with the respectively valid regulations, e.g. planning and installation acc. to EN 60079-14
- Make sure when working on the instrument (mounting, installation, maintenance) that there is no explosive atmosphere present, the supply circuits should be voltage-free, if possible.
- The instrument has to be mounted according to the manufacturer specifications, the EU type approval certificate and the valid regulations and standards

- Modifications on the instrument can influence the explosion protection and hence the safety, therefore repairs are not permitted to be conducted by the end user
- Modifications must only be carried out by authorized employees
- Use only approved spare parts
- Components for installation and connection not included in the approval documents are only permitted if these correspond technically to the latest standard mentioned on the cover sheet. They must be suitable for the application conditions and have a separate certificate. The special conditions of the components must be noted and if necessary, the components must be integrated in the type test. This applies also to the components already mentioned in the technical description.
- Vessel installations and probable flow must be taken into account

Cable and wire entries

- The DPT-20 must be connected via suitable cable gland or conduit systems that are in conformity with the requirements of the flame proofing and the IP protection and provided with a separate type approval certificate. When connecting DPT-20 to conduit systems, the corresponding sealing facility must be connected directly to the housing.
- The red thread or/dust covers screwed in when the instruments are shipped (depending on the version) must be removed before setup and replaced by cable entries or closing screws suitable for the respective ignition protection type and IP protection.
- Note type and size of the thread: A label with the respective thread name is in the area of the respective thread
- Threads must have no damages
- Cable entries and closing screws should be mounted correctly and according to the safety instructions of the manufacturer to ensure the specified ignition protection type and IP protection rating. When using certified or suitable cable glands, closing screws or plug connections, it is absolutely necessary to note the corresponding certificates/documents. Supplied cable entries or closing screws meet these requirements.
- Unused openings must be closed with plugs suitable for the ignition protection type and IP protection. Supplied plugs meet these requirements.
- Cable or wire entries resp. the closing screws must be tightly screwed into the housing
- The connection cables resp. pipeline sealing facilities must be suitable for the application conditions (e.g. temperature range) of the application
- With surface temperatures > 70 °C, the cables must be suitable for the higher application conditions
- The connection cable of DPT-20 has to be wired fix and in such a way that damages can be excluded.

Single chamber housing "Ex t"

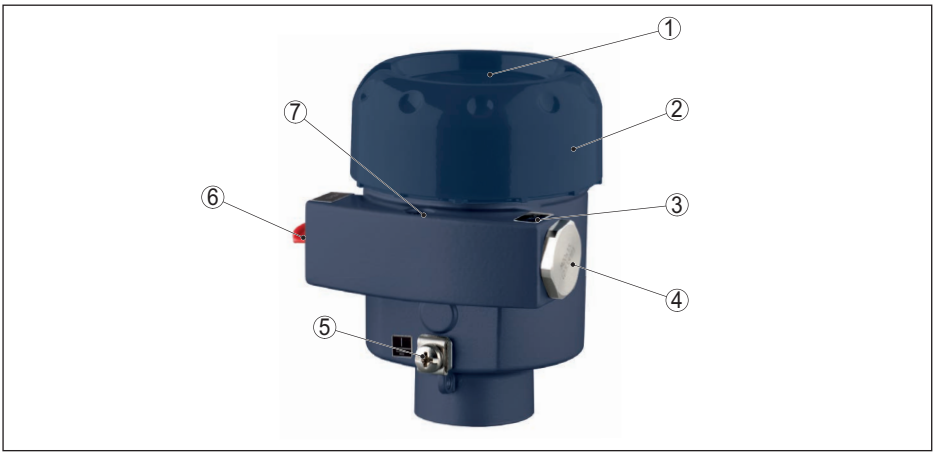

1 Lid, optionally with inspection window
2 "Ex t" connection compartment with electronics module
3 Label: Thread type
4 Screw plug
5 External ground terminal
6 Red threaded or dust protection cap
Transport protection, replace with installation
7 Locking screws of the lid for lid locking

Double chamber housing "Ex t"

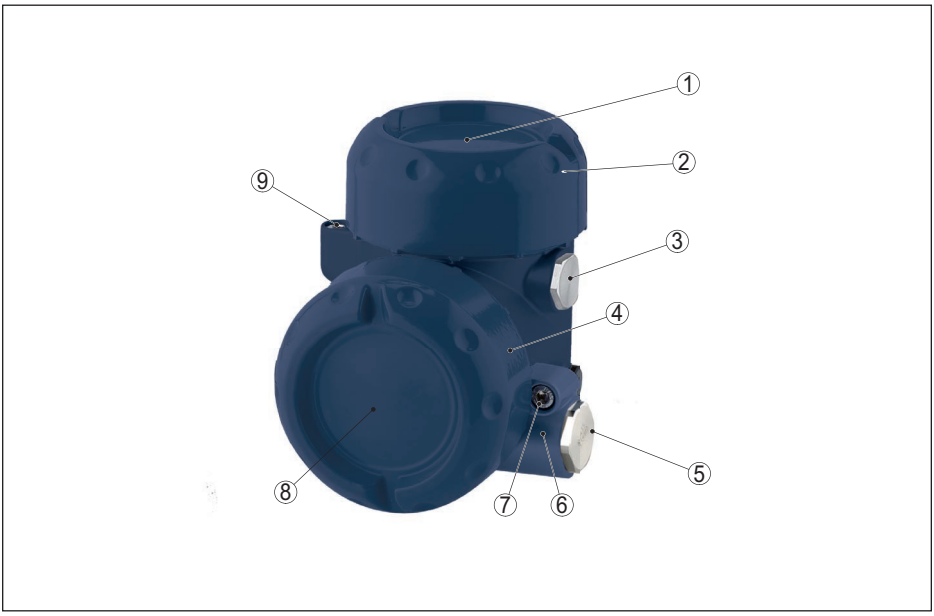

1 Lid, optionally with inspection window
2 "Ex t" connection compartment with electronics module
3 Screw plug
4 Connection compartment
5 Transport protection, replace with installation Red threaded or dust protection cap
6 Label: Thread type
7 Locking screws of the lid for lid locking
8 Lid, optionally with inspection window
9 Locking screws of the lid for lid locking

Mounting

Keep in mind for instrument mounting

- Mechanical damage on the instrument must be avoided
- Mechanical friction must be avoided
- Vessel installations and probable flow must be taken into account
- Process connections separating two areas of different Ex-zones must comply to valid regulations and standards and the protection rating must be in conformity to EN 60529.
- Close the housing lid (s) up to the stop before starting operating, to ensure the IP protection rating specified on the type label
- Protect the lid against unauthorized opening by unscrewing the locking screw up to the stop. With double chamber housing, you have to protect both lids.

8 Safe operating mode

General operating conditions

- Do not operate the instrument outside the electrical, thermal and mechanical specifications of the manufacturer

- Use the instrument only in media against which the wetted parts are sufficiently resistant
- Note the relation between process temperature on the sensor/antenna and the permissible ambient temperature on the electronics housing. For permissible temperatures, see the respective temperature tables. See chapter " *Thermal data*".
- If necessary, a suitable overvoltage arrester can be connected in front of the DPT-20
- For assessment and reduction of the explosion risk, valid standards such as for example EN 1127-1 must be taken into account
- Lids must not be opened if there is a hazardous atmosphere. The housing lids are marked with the warning label:

WARNING - DO NOT OPEN WHEN AN EXPLOSIVE ATMOSPHERE IS PRESENT

9 Instructions for zone 0/20 applications

The usual atmospheric conditions (in accordance with EN 60079-0 related to the properties of the explosive atmosphere) under which it is assumed that the measuring probe is operated in zone 0, are:

- Temperature: -20 … +60 °C.
- Pressure: 80 … 110 kPa (0.8 … 1.1 bar)
- Air with normal oxygen content, normally 21 % (V/V)

The chapter " *Thermal Data*" contains concrete notes on the use outside of this usual temperature range.

If there are no explosive mixtures or supplementary measures, e.g. according to EN 1127-1, then the instruments can be also operated according to the manufacturer specification outside atmospheric conditions.

Process fittings between an area requiring EPL Ga and less endangered areas must show a tightness in accordance with protection rating IP67 acc. to EN 60529.

The operator must ensure that the medium temperature in the EPL Ga range within the process vessel is not higher than 80 % of the self-ignition temperature of the concerned medium (in °C) and does not exceed the max. permissible flange temperature depending on the temperature class. The parts of the differential pressure transmitter which during operation are in contact with flammable products, must be integrated in the periodic overpressure test of the plant.

When used as EPL Ga/Gb or EPL Da/Db instrument, a suitable overvoltage arrester must be provided acc. to EN 60079-14 as protection against overvoltages.

10 Potential equalization/Grounding

- Integrate the instruments into the local potential equalisation, e.g. via the internal or external earth terminal
- The potential equalization terminal must be secured against loosening and twisting
- If grounding of the cable screening is necessary, this must be carried out acc. to the valid standards and regulations, e.g. acc. to EN 60079-14
- The intrinsically safe input and the intrinsically safe output circuits are ground-free. The voltage resistance against ground is min. 500 Veff.

11 Electrostatic charging (ESD)

In case of instrument versions with electrostatically chargeable plastic parts, the danger of electrostatic charging and discharging must be taken into account!

The following parts can charge and discharge:

- Lacquered housing version or alternative special lacquering
- Plastic housing, plastic housing parts
- Metal housing with inspection window
- Plastic process fittings
- Plastic-coated process fittings and/or plastic-coated sensors
- Connection cable for separate versions
- Type label
- Isolated metallic labels (measuring point identification plate)

Take note in case of danger of electrostatic charges:

- Avoid friction on the surfaces
- Do not dry clean the surfaces

The instruments must be mounted/installed in such a way that the following can be ruled out:

- in the case of extremely flammable dusts with a minimum ignition energy of less than 3 mJ, the device must not be used in areas where intensive electrostatic charging processes can be expected
- electrostatic charges during operation, maintenance and cleaning.
- process-related electrostatic charges, e.g. by measuring media flowing past

The warning label indicates danger:

WARNING - POTENTIAL ELECTROSTATIC CHARGING HAZARD - SEE INSTRUCTIONS

12 Electrical data

Supply and signal circuit: DPT-20 with 4 … 20 mA output signal (A/H/S) Terminal 1[+], 2[-] in electronics compartment of the single chamber housing DPT-20 with 4 … 20 mA output signal (A/H/S) Terminal 1[+], 2[-] in connection compartment of the double chamber housing	U = 9.6 … 30 V DC I = 4 … 22 mA
Supply and signal circuit: DPT-20 with Foundation Fieldbus or Profibus PA output signal (F/P) Terminal 1[+], 2[-] in electronics compartment of the single chamber housing DPT-20 with Foundation Fieldbus or Profibus PA output signal (F/P) Terminal 1[+], 2[-] in connection compartment of the double chamber housing	U = 9.6 … 32 V DC I = 4 … 11 mA

DPT-20 with additional current output 4 … 20 mA (B) **Supply and signal circuit I:** Terminal 1[+], 2[-] in connection compartment of the double chamber housing **Supply and signal circuit II:** Terminal 7[+], 8[-] in connection compartment of the double chamber housing	 U = 9.6 … 30 V DC I = 4 … 22 mA U = 9.6 … 30 V DC I = 4 … 22 mA
DPT-20 with the features housing version/cable outlet with external housing (A/S) and digital display (AB-Modul) installed (B/C) **Sensor circuit:** Terminal 1[yellow], 2[white], 3[red], 4[black]	In the version with a cable between electronics and transmitter housing, a length of the supplied cable of max. 180 m is permitted. The intrinsically safe circuits to the sensor are galvanically connected to ground potential.
Display and adjustment circuit: Terminals 5, 6, 7, 8 in electronics compartment of the single chamber housing Terminals 5, 6, 7, 8 in connection compartment of the double chamber housing	Only for connection to the associated display unit DI-PT-E.

13 Thermal data

The following temperature tables are valid for all housing and electronics versions.

Device protection level (EPL)	Product temperature (Tp) on the sensor	Ambient temperature (Ta)
Da	-40 … +70 °C	-40 … +70 °C
Da/Db	-40 … +85 °C	-40 … +70 °C
Da/Dc	-40 … +85 °C	-40 … +70 °C
Db	-40 … +70 °C	-40 … +70 °C

The limits of the permissible temperature range can be limited due to the O-ring material used. The O-ring material used is specified on the type label. The limits for the temperature range depending on the materials are specified in the below table:

Designation: Seal ring	Temperature range: Measuring cell	Temperature range: Seal ring
FKM	-40 … +85 °C	-40 … +220 °C
NBR	-20 … +85 °C	-20 … +120 °C
EPDM	-40 … +85 °C	-50 … +140 °C
PTFE	-40 … +85 °C	-200 … +260 °C
FFKM	-40 … +85 °C	-46 … +240 °C
Copper	-40 … +85 °C	-200 … +300 °C

Notes

Notes

Printing date:

All statements concerning scope of delivery, application, practical use and operating conditions of the sensors and processing systems correspond to the information available at the time of printing.

WIKA Alexander Wiegand SE & Co. KG
Alexander-Wiegand-Straße 30
63911 Klingenberg
Germany
Phone (+49) 9372/132-0
E-mail: info@wika.de
www.wika.de

66091-EN-220216